DIAPHRAGM VALVE

469021

PN 10

No	Part	Material
1	Body	Bronze Rg5
2	Bonnet	Bronze Rg5
3	Stem	CuZn35Ni
4	Disc	Cast iron GG25
5	Diaphragm	NBR
6	Handwheel	Cast iron GG25
7		
8		
9		
10		

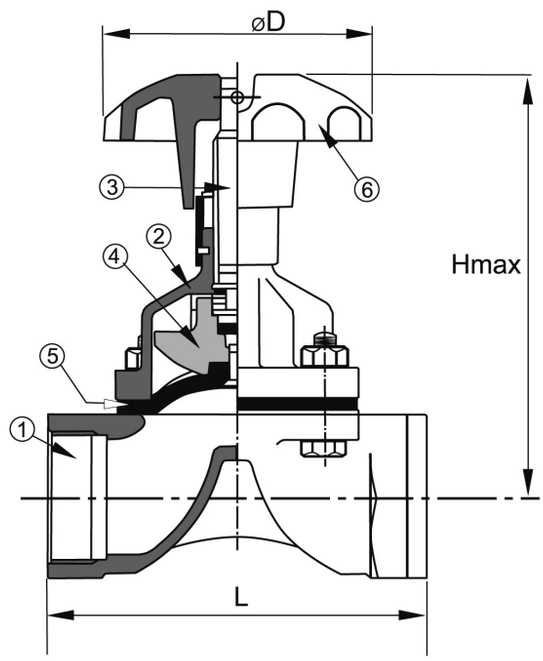

Variants:
Diaphragm EPDM

Other dimensions/materials on request

DN	G			D	L	Hmax	Max working-pressure Mpa 120 °C		Weight Kg
15	1/2”			82	64	90	1,0		1,3
20	3/4”			82	83	94	1,0		1,5
25	1”			120	111	119	1,0		2,2
32	11/4”			120	124	155	1,0		3,0
40	11/2”			120	143	164	1,0		3,9
50	2”			120	168	188	1,0		4,6